Central Brass
COMPANY

SPECIFICATION SHEET

80826
Central Brass Series

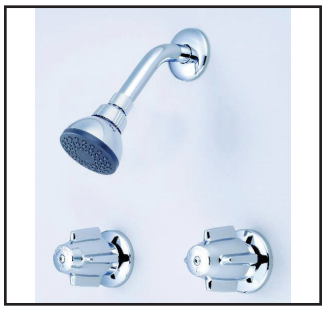

Two Handle Shower Set

- Canopy Handles
- Shower Head, Arm & Flange
- 1/2” Direct Sweat Inlets
- Ceramic Discs
- 8” Centers
- Built-in Transfer Valve, Brass Plug Included

Code and Standards

*For other finishes and flow rates offered, please visit our website, email an inquiry to sales@pioneerind.com or contact our sales at 800-338-9468

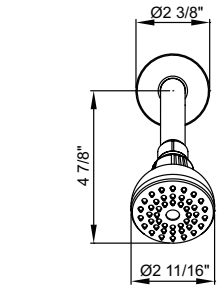

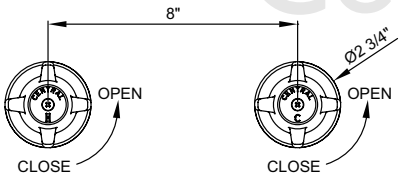

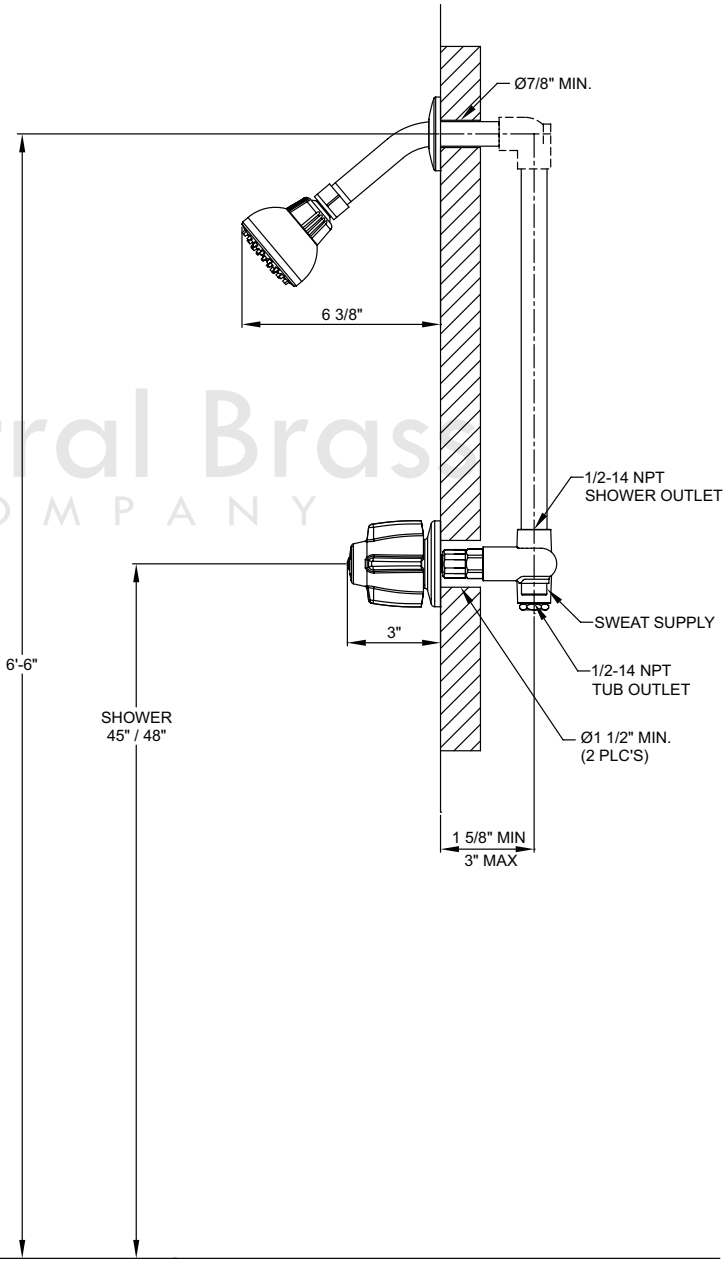

Central Brass COMPANY