Central Brass
COMPANY

Date:	SPECIFICATION SHEET

TWO HANDLE SLANT BACK LAVATORY FAUCET

1178-DA
SHOWN

ADA

Model #: _____

Specific Features: _____

Project Name: _____

Submitted For: _____

Date: _____

- Two Handle Slant Back Lavatory Faucet
- Canopy Handles
- 45-Degree Slant Back Spout
- Replaceable Seat
- 3-Hole 4” to 6” Installation
- Brass Pop-Up Drain Assembly
- 2.0 GPM Flow Rate

Model #	Features	Finish	
1178-A	Less Pop-up Drain	PVD PC	
1178-DA		PVD PC	

Central Brass products are engineered and manufactured to meet the following standards and codes:

ASME A112.18.1
ANSI A117.1

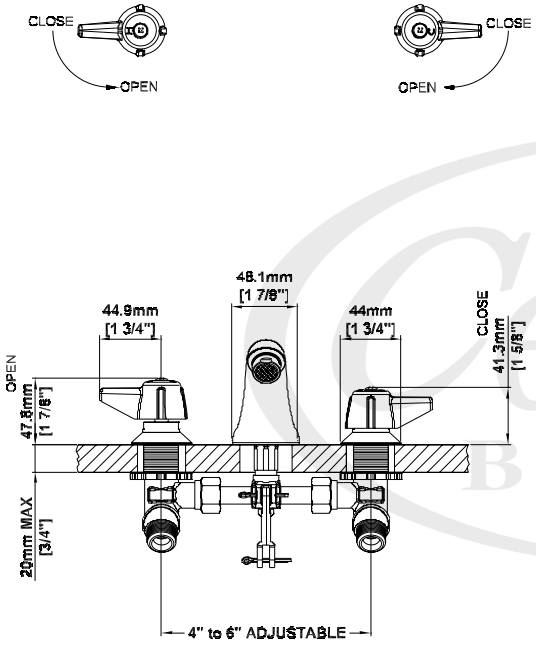

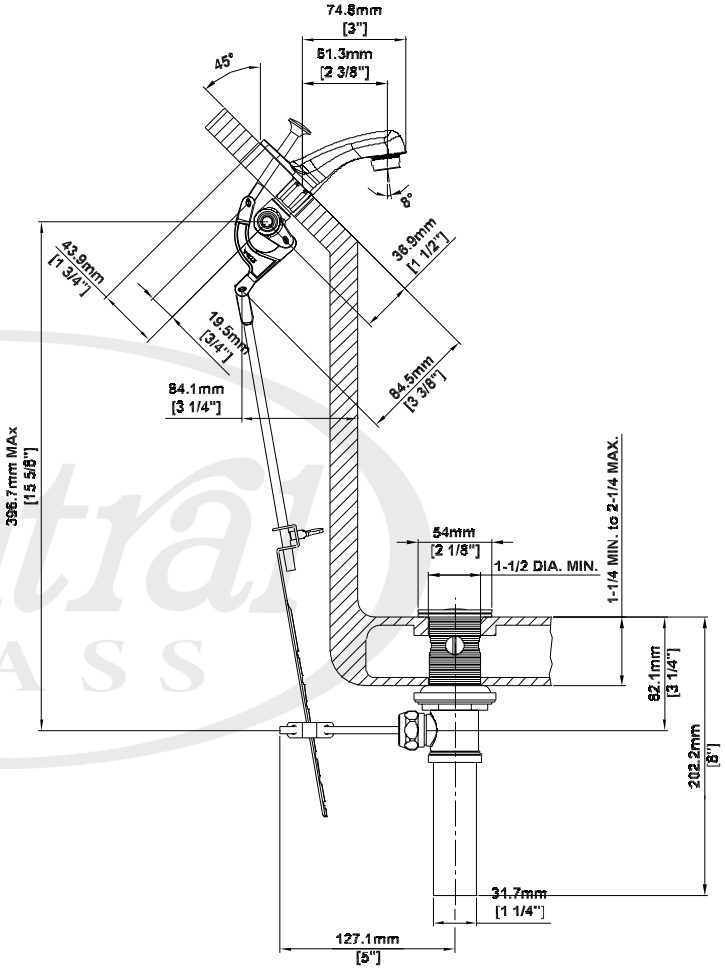

Brecksville, OH
www.centralbrass.com
Central Brass Company © 2012