KSSDB2542 WIRE GRID

Cat. No.

KSSDB2542-WIRE

BARCLAY

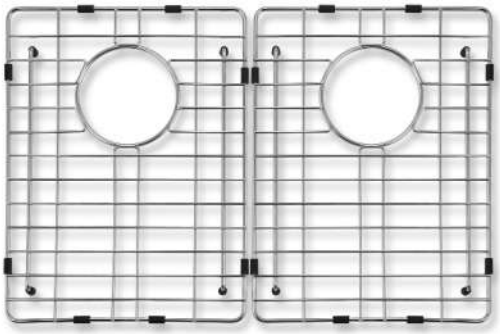

Features:

- ►Fits bottom of KSSDB2542 double bowl farmer sink
- ►Rubber Feet Covers Included

Finishes:

SS Stainless Steel

Large Wire Grid
W: 14-¼”
D: 16-⅝”
H: 1”

Small Wire Grid
W: 14-¼”
D: 16-⅝”
H: 1”

Drain Hole: 4-¾”

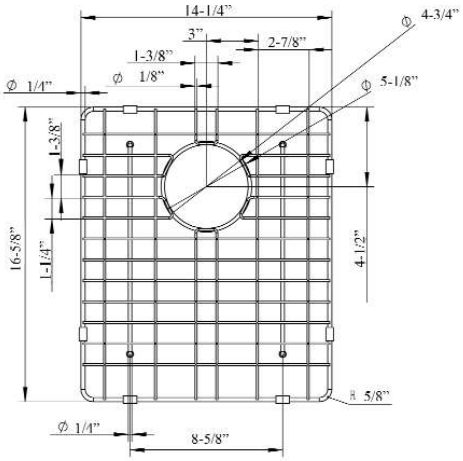

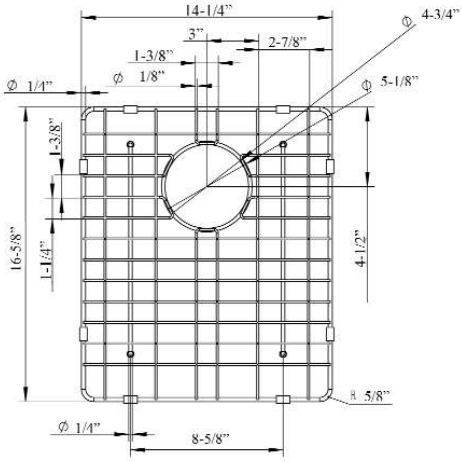

Dimensions and specifications subject to change without notice.